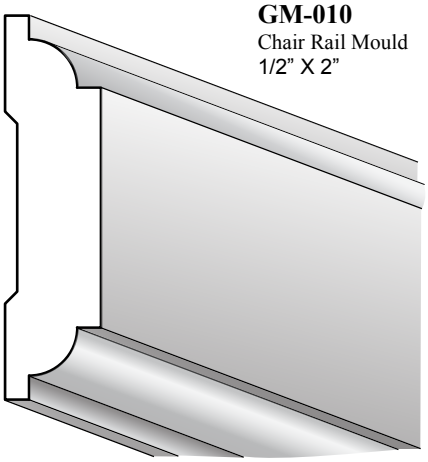

GM-010
Chair Rail Mould
1/2" X 2"

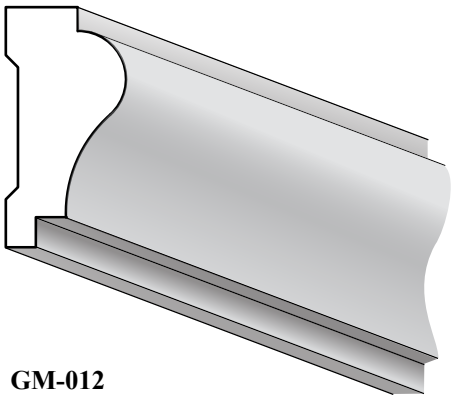

GM-012
Panel Mould
5/8" X 1-1/4"

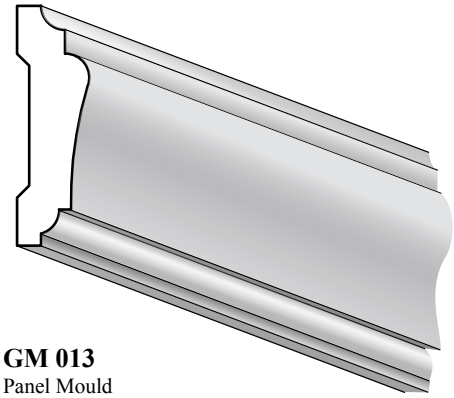

GM 013
Panel Mould
3/8" X 1-1/4"

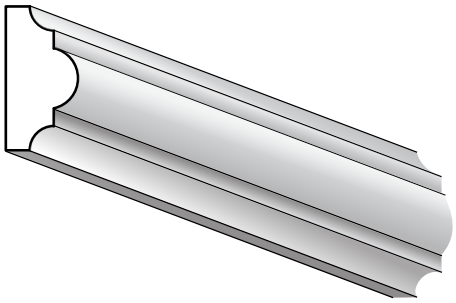

GM 015
Panel Mould
3/8" X 3/4"

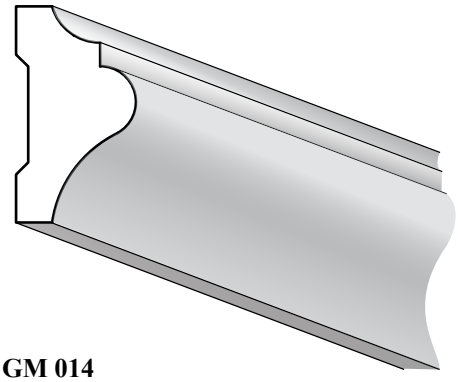

GM 014
Panel Mould
5/8" X 1-1/8"

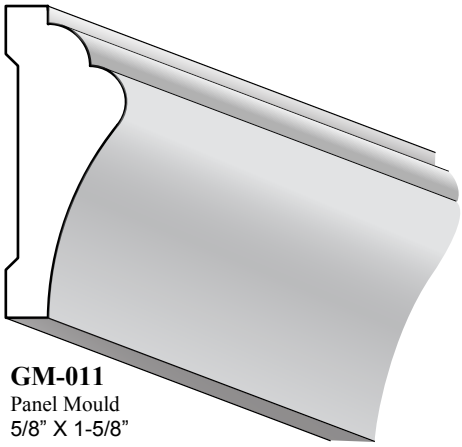

GM-011
Panel Mould
5/8" X 1-5/8"

www.granitemill.com | 2200 South Main Street, Salt Lake City, Utah 84115 | Phone: (801) 467-3222 Fax: (801) 484-4742